PALADIUM **R19T steel 36 chrome with an Epron Syncron mechanism**

DESCRIPTION

Seat and backrest

- wide comfortable seat and ergonomically profiled backrest
- comfortable, high backrest
- backrest upholstered on both sides

Mechanism

- free floating seat and backrest
- backrest and seat synchro tilting at the rate 2:1
- maximum backrest tilt angle 22˚ at 11˚seat tilt
- possibility of seat and backrest lock in 5 positions
- adjustable backrest tilt force
- Anti-shock - the feature controls the backrest to avoid hitting a user’s back
- smoothly adjustable chair height with pneumatic lift

Armrests

- adjustable armrests with soft pads

Base

- combination of polished and painted in white aluminum

Castors

- self-braking castors for carpets or parquets

FINISHES

DIMENSIONS

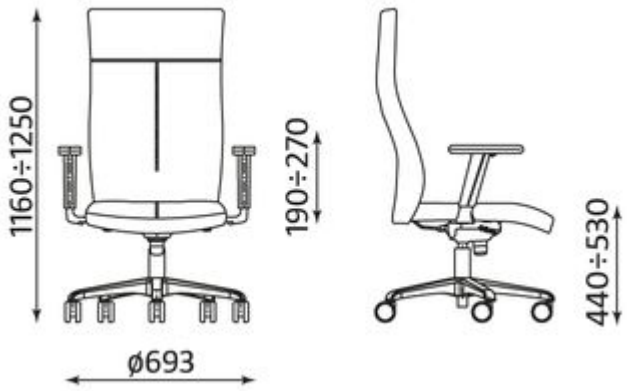

seat width: 500
seat depth: 480

All rights reserved 2013 Nowy Styl Group

CONTACT
Nowy Styl Sp. z o.o.
Pużaka 49
38-400 Krosno
Tel. +48 13 43 76 100
Fax +48 13 43 62 732
info@nowystylgroup.com

Export Department
Mięsowicza 6
38-400 Krosno
Poland
Tel. +48 13 43 76 111
export@nowystylgroup.com

Marketing Department
Warszawska 15
32-086 Węgrzce
Poland
Tel. +48 12 63 98 602